BestAccessDoors
Phone: 1-800-483-0823
Fax: 1-888-828-6021
Email: info@BestAccessDoors.ca

System BA-F2 - 1/2”

OPEN HINGE, REMOVABLE DOOR FOR 1/2" DRYWALL DESIGNED FOR NON-RATED WALLS AND CEILINGS.

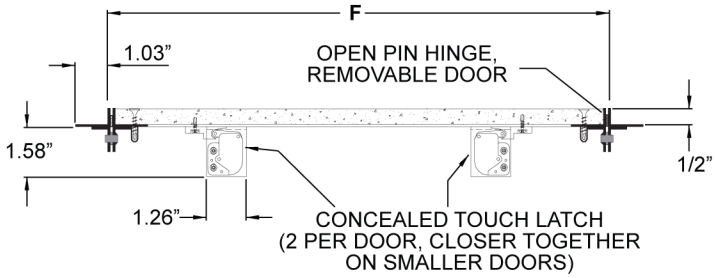

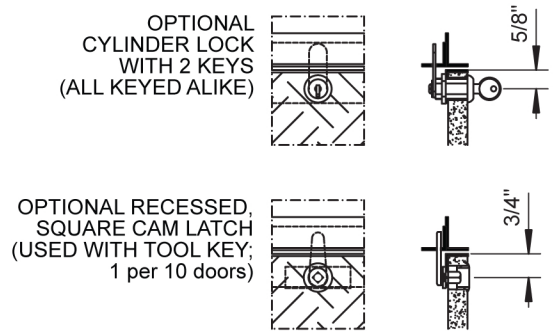

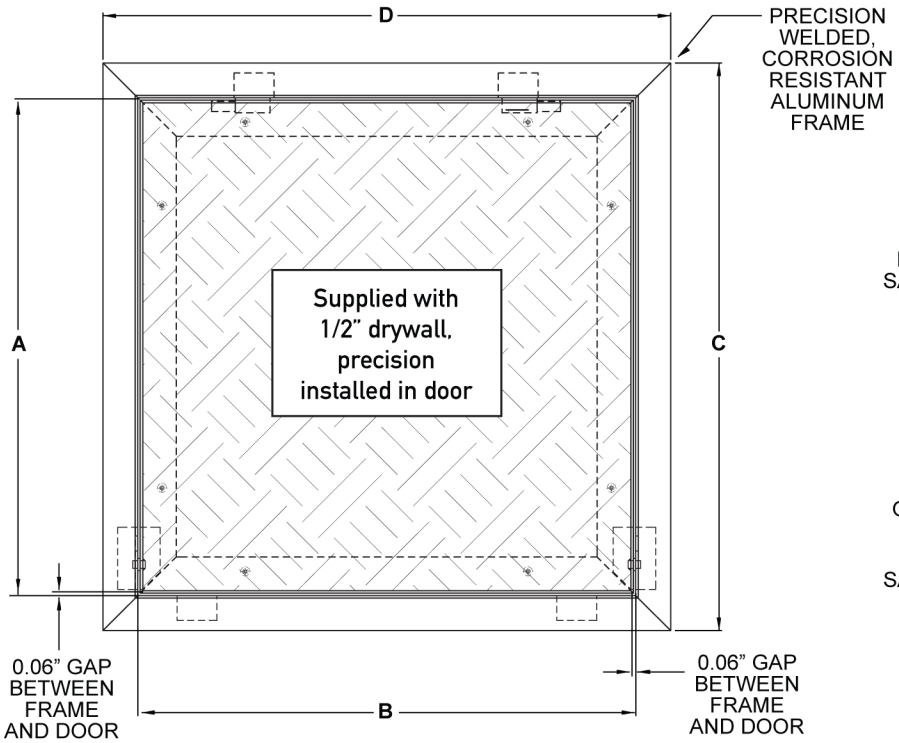

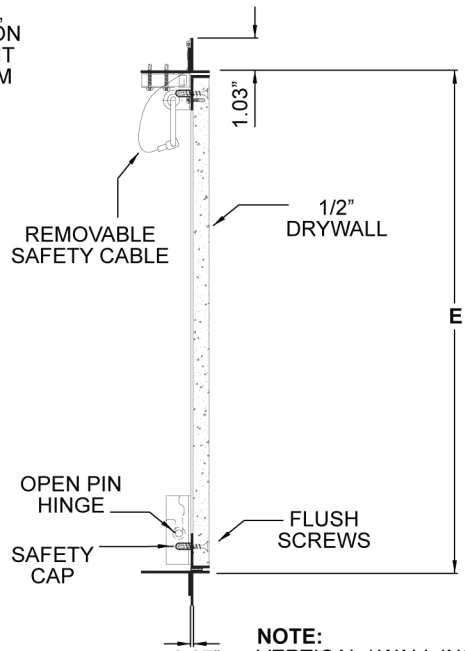

NOTE:
VERTICAL / WALL INSTALLATION: DOOR MUST BE INSTALLED HINGE SIDE DOWN

STANDARD FEATURES

CONCEALED TOUCH LATCH; OPEN HINGE, REMOVABLE DOOR; SUPPLIED TO FIT 1/2” DRYWALL; DESIGNED FOR NON-RATED WALLS & CEILINGS; ALUMINUM FRAME AND DOOR STRUCTURE, WELDED, MILL FINISH; NON-SNAG REMOVABLE SAFETY CABLE

DOOR PANEL OPTION

- [x] MOISTURE RESISTANT PURPLE (GREEN) BOARD PRE-INSTALLED (STANDARD)
- [ ] DOOR AND FRAME STRUCTURE ONLY
- [ ]

ADDITIONAL LOCKING OPTIONS

- [ ] SQUARE CAM LATCH & TOOL KEY
- [ ] CYLINDER LOCK & KEY
- [x] None - or enter instructions here

QTY.	NOMINAL SIZE Inch	mm	A Inch	mm	B Inch	mm	C Inch	mm	D Inch	mm	E Inch	mm	F Inch	mm	OPTIONS
	8 x 8	203 x 203	**8.00**	203	**8.00**	203	**10.20**	258	**10.20**	258	**8.14**	207	**8.14**	207	**2**
	12 x 12	305 x 305	**12.00**	305	**12.00**	305	**14.20**	359	**14.20**	359	**12.14**	308	**12.14**	308	**2**
	16 x 16	406 x 406	**16.00**	406	**16.00**	406	**18.20**	461	**18.20**	461	**16.14**	410	**16.14**	410	**2**
	18 x 18	457 x 457	**18.00**	457	**18.00**	457	**20.20**	512	**20.20**	512	**22.14**	461	**22.14**	461	**2**
	20 x 20	508 x 508	**20.00**	508	**20.00**	508	**22.20**	562	**22.20**	562	**20.14**	512	**20.14**	512	**2**
	24 x 24	610 x 610	**24.00**	610	**24.00**	610	**26.20**	664	**26.20**	664	**24.14**	613	**24.14**	613	**2**
	24 x 36	610 x 915	**24.00**	610	**36.00**	915	**26.20**	664	**38.20**	969	**24.14**	613	**36.14**	919	**2**
	x	x													**2**

Dimensions are subject to manufacturer’s tolerance of plus or minus 1/4”. BestAccessDoors assumes no responsibility for use of void or suspended data. Please always make sure to use current specifications.

BestAccessDoors

Box 30021 - RPO Upper James St, Hamilton, Ontario, L9B 0E4
For more information, contact BestAccessDoors.

Phone: 1-800-483-0823
Fax: 1-888-828-6021
Email: info@BestAccessDoors.ca